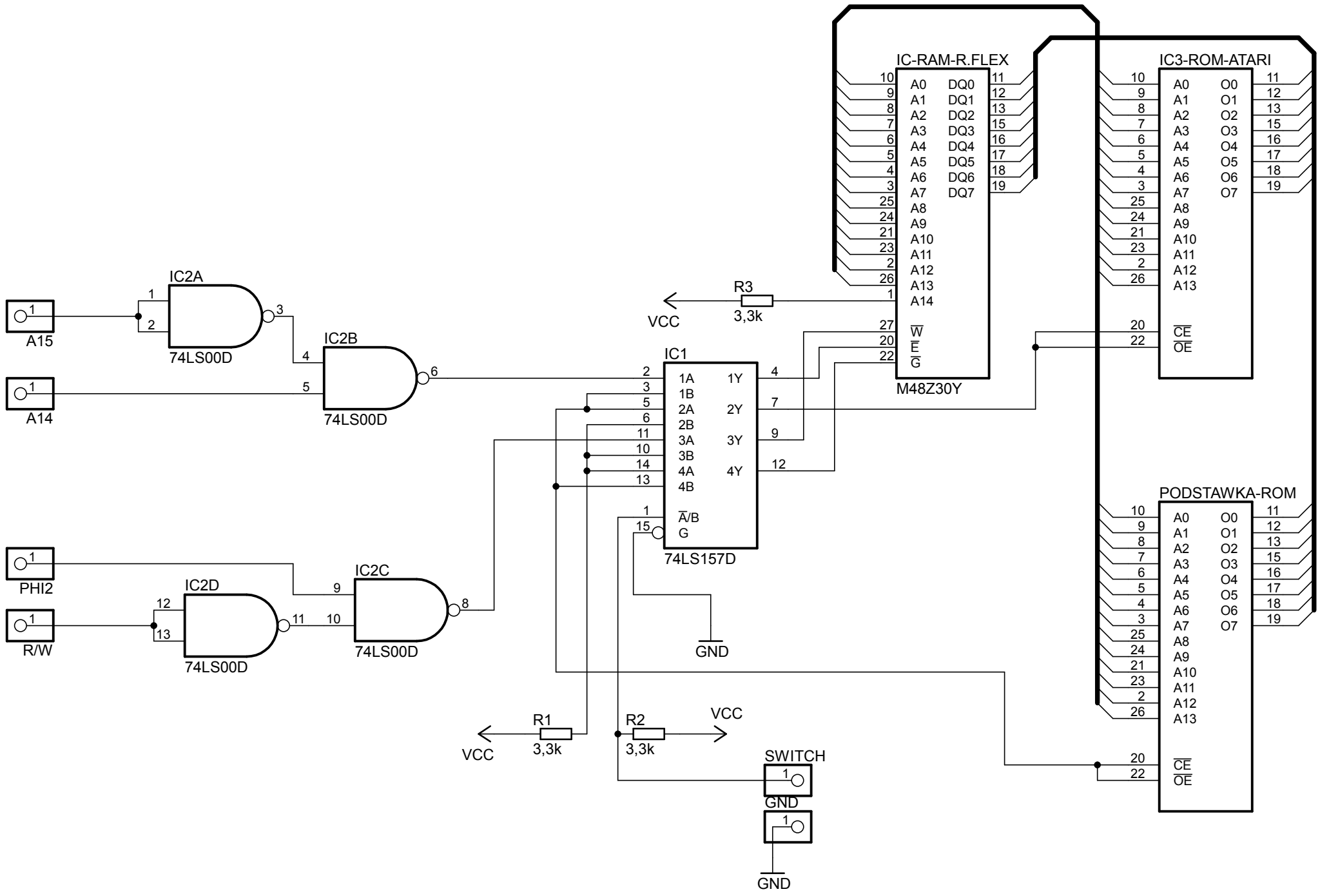
IC-RAM-R.FLEX
M48Z30Y
IC3-ROM-ATARI
PODSTAWKA-ROM
IC1
74LS157D
IC2A
IC2B
IC2C
IC2D
74LS00D
A15
A14
PHI2
R/W
R1
R2
R3
3,3k
VCC
GND
SWITCH